DeadEasy 32

Patent Pending

Test for Dead Tester, 3 Phase

DeadEasy is a 3 phase, “Test for Dead” test device. DeadEasy tests a circuit to establish whether the AC phase conductors are alive or dead. DeadEasy provides any worker with a simple and safe method of verifying MCC (Motor Control Centre) based, electrical isolations before conducting mechanical maintenance.

Figure 1 - DeadEasy 32
Part: DE32

Figure 2 - DeadEasy Human Machine Interface
Part: DE32HMI

Figure 3 - DeadEasy Human Machine Interface cable
Part: DE32HMIC

Figure 4 - DeadEasy Instrument cable
Part: DE32IC

DeadEasy confirms that equipment is disconnected from electricity. This is achieved through the use of a fault tolerant architecture, self-testing facilities as well as a simple isolation confirmation procedure.

One power circuit requires the following equipment which is sold as a DeadEasy Kit, Part:DE32KIT:

- One DeadEasy (DE32 – Figure 1)
- One DeadEasy Human Machine Interface (DE32HMI – Figure 2)
- One DeadEasy Human Machine Interface cable (DE32HMIC – Figure 3)
- Two DeadEasy Instrument cables (DE32IC – Figure 4)

Features

DeadEasy offers the following features:

- **Simple Use** – Isolator On = Red Lamp, Isolator Off = Green Lamp, Self Test = Red/Green Lamp. Minimal training and changes to isolation procedures.
- **Positive Result** - Lamp On = Isolated. Whereas “Pilot Lamp” solution Lamp Off = Isolated? = Inconclusive!
- **Operator Confidence** - Operator initiated Self Testing provision
- **Power System Safety** - No electrical connections, hence degradation of the power circuit
- **Remote Signalling** – Transistor Output and optional extra RightSwitch Remote Indicator
- **Inexpensive** – Similar to pilot lamps but without the safety and maintenance issues
- **Simple Installation** – 25mm wide DIN rail mount electronics, HMI incorporating LED lamps and self test request all in one only 22.5mm lamp cut-out
- **Wide Application** - Suitable for new and retrofit installations and dusty, low and high ambient light environments.
- **Verifier Safety** – No exposure to live terminals. In contrast to electrician confirmed, isolation verification methods
- **Flexible** – Allows subsequent verifications without reversal of the isolation ie accommodates late working parties

Operation

DeadEasy function is as follows:

- Isolator on/closed/1 = Red LED only should be illuminated
- Isolator off/opened/0 = Green LED only should be illuminated

Assurance that DeadEasy provides correct indication in response to the presence or absence of mains voltages is achieved by self testing that occurs:

1. Automatically before indicating that the mains circuit is deenergised
2. Automatically every 30 seconds while the mains circuit is deenergised,
3. Manually following a “Self Test Request” that is initiated by touching the HMI while the mains circuit is deenergised

Redbusbar Pty Ltd
Unit 5/281 Sandgate Road
Albion Q 4010
AUSTRALIA

P: +61 7 3262 5880
F: +61 7 3262 5884

www.redbusbar.com
info@redbusbar.com

Test for Dead Tester, 3 Phase

This results in a DeadEasy “Isolation Verification Procedure”, that is provided with each DeadEasy in the form of a self adhesive label, as depicted in Figure 5.

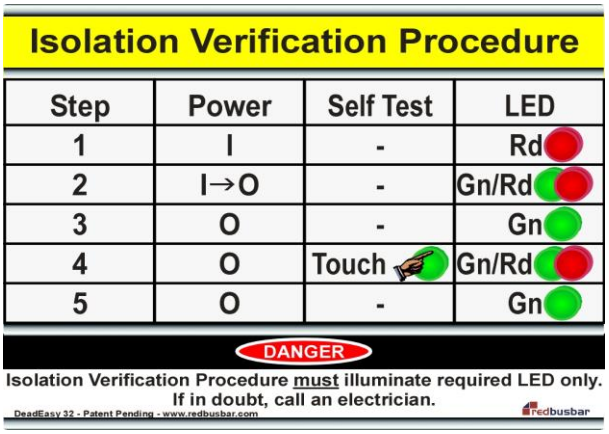

Isolation Verification Procedure

Step	Power	Self Test	LED
1	I	-	Rd
2	I→O	-	Gn/Rd
3	O	-	Gn
4	O	Touch	Gn/Rd
5	O	-	Gn

DANGER

Isolation Verification Procedure must illuminate required LED only.
If in doubt, call an electrician.

DeadEasy 32 - Patent Pending - www.redbusbar.com redbusbar

Figure 5

The “Manual Self Test Request” is activated by placing an object (or the operators hand) within 10mm of the HMI face. This allows the user to witness DeadEasy testing and confirms that DeadEasy is still functional after it has reported the test result. In this way it establishes that the isolated result, previously reported, is of high integrity.

Should the above procedure be followed and LED lamp indication is different to that identified in the procedure, a problem with either the power supply, isolation or DeadEasy has been identified.

Description

A block diagram of a typical 3 phase switch and DeadEasy is shown in Figure 6.

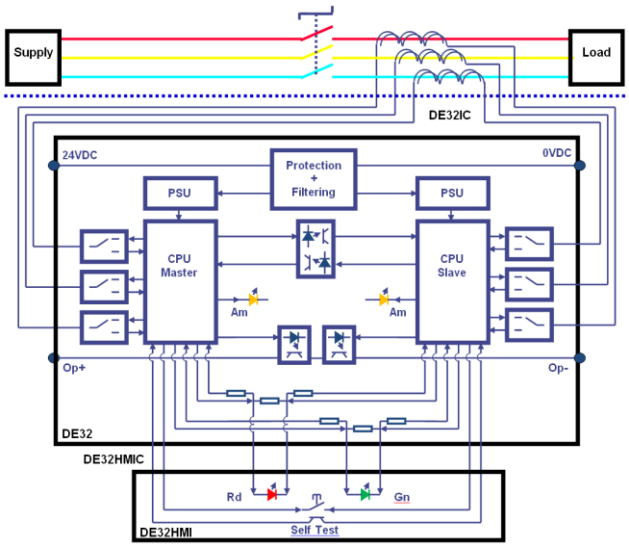

Figure 6

Specifications

Application	MCC drive cell/bucket where DeadEasy is installed between a circuit breaker and a contactor / VSD.
Environment	Altitude - 0m to 2,000m Temperature - -10C to 70C, 14F to 158F Humidity – 0% to 80% Use – Indoor (DE32), Indoor/Outdoor (DE32HMI Terminals/Face) Pollution Degree – 2 (DE32), 2 (DE32HMI Terminals), 3 (DE32HMI Face)
Device Power Supply	24VDC, 0.1A, 0V Referenced to Earth. UL508 24VDC, Class 2 circuit in industrial use. Cable Minimum Rated Temperature - 75C, 167F
Power Supply Terminals	Conductors - 0.2 to 2.5mmsq, 24 to 12AWG. Tightening Torque - 0.5Nm to 0.6Nm. Rated Temperature - -40C to 105C, -40F to 221F
Power System Voltage	1, 2, or 3 Phase, 600VAC (Line to Neutral), 50Hz/60Hz, Direct & Impedance Earthed (Non Isolated Systems)
Power System Safety	CAT IV, 300VAC (Line to Neutral) CAT III, 600VAC (Line to Neutral)
Detection Thresholds	Isolated = Phase to Earth Voltage <25VAC RMS Energised = Phase to Earth Voltage >50VAC RMS
Indication	Super Bright (clear when off) LEDs as follows: • De-Energised – Green • Energised – Red • Fault – 2 off Amber (located on DE32)
Outputs	Mains Deenergised - Transistor Output, 24VDC, 100mA.
Control	Self Test Request Object or Hand within 10mm, 3/8” of HMI lens cap
Accessories	RightSwitch Remote Indication (Optional Extra)
Size	DE32 = 25W x 120H x 110D, 1”W x 4.75”H x 4.35”D DE32HMI = 22.5 Diameter x 50D, 7/8” Diameter x 2”D
Degree of Protection	DE32 Terminals = IP2X (IEC 60529 not certified by UL) DE32HMI = IP66 (IEC 60529 not certified by UL), NEMA 4X (UL Certified)
Functional Safety	Dual Channel Architecture, Single Fault Tolerant - In the event of any single component, cabling or connection failure. Designed to ISO 13849-1 – Category 3, PL d
Approvals	Australia • C-Tick (AS/NZS CISPR 11:2004) Europe • CE (EN 61326-1:2006, IEC 61326-1:2005 Inc C1:2008, EN 55011:2007) USA/Canada – UL Listed E353406 • UL 61010-1 2nd Ed • CSA 22.2 No. 61010-1-04 • FCC (CISPR 22:2006, FCC Part 15 Subpart B)

redbusbar

Redbusbar Pty Ltd
Unit 5/281 Sandgate Road
Albion Q 4010
AUSTRALIA

P: +61 7 3262 5880
F: +61 7 3262 5884

www.redbusbar.com
info@redbusbar.com